T042FM830ELPW | CCTLED DOWNLIGHT Feel
Recessed LED downlight

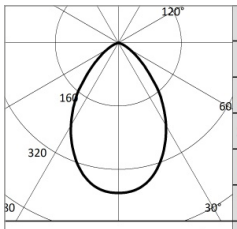

3000K		H(m)	D(m)	Emax(lx)
Ra80			72°	
Fixture Power	20W	1	1.46	1200
Source Flux	3168lm	2	2.92	300
Fixture Flux	1724lm	3	4.38	133
Efficacy	88lm/W	4	5.84	75
TS1700 Imax=379cd/klm	Imax	1200cd	5	7.30	48

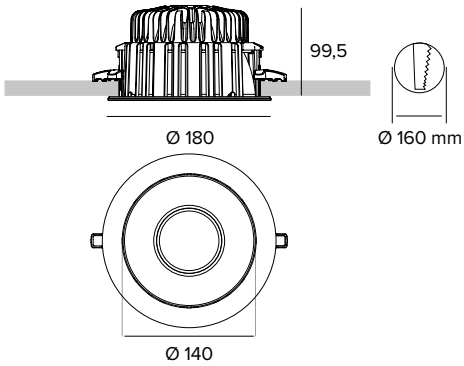

The figures on the drawing are expressed in mm.

SOURCE

High efficiency Chip on Board LED Ra80.
Energy efficiency class: D
Nominal power: 17W
Nominal flux: 3168lm
Colour rendering index: 80
Rf: 84
Rg: 96
CCT nominal: 3000K
Lifetime (L80/B10): >100000h tq +25°C

ILLUMINOTECHNICAL CHARACTERISTICS

Optical system composed of a highly reflective matt finish reflector, a prismatic refractor and a central shielding element for a totally indirect light emission.
Optic: MATT
Beam angles: VWFL
Optical efficiency: 54%
Fixture flux: 1724lm
Luminous efficacy: 88lm/W
Photobiological safety: Compliant with RG1 low risk group

MECHANICAL CHARACTERISTICS

Body and heat sink in die-cast anodised aluminium. Passive heat sink cooling system. Completed with decorative white rounded ring.
Colour and finish: White
Weight: 1.15Kg
Degree of protection: IP20 for recessed part
Degree of protection: IP43 for exposed part

ELECTRICAL CHARACTERISTICS

Complete with an electronic ON/OFF driver. Emergency kit with 1h and 3h batteries available as accessories. Luminaire compliant with EN 60598-2-22 for power supply from a centralised emergency system CPSS (Central Power Supply System), not incorporated in the luminaire - high risk areas excluded. The default power and flux are 100% in AC and 100% in DC.
Fixture Power: 20W
Power supply: 220-240Vac 50/60Hz
Insulation Class: CLASS 2
Type of driver / Control: ON-OFF
Driver included: YES
Class F: YES
SAFE FLICKER: PstLM=<1 and SVM=<0.4 (IEC TR 61547-1 and IEC TR 63158), to ensure a more comfortable and safe light
Ambient temperature: 0°C / +25°C

INSTALLATION

Quick tool-free mounting system for false ceiling installation from 0.5 to 30mm.

NOTES

110-277Vac version available on request.

WARRANTY

5 years.

WARNING

Luminaire designed for disposal/recycling at end-of-life. Replaceable (LED only) light source by a professional. Replaceable control gear by a professional.

Due to the technological evolution of the electronic components, the data provided may be updated, and as such, confirmation must be requested during the order process.
Luminous flux and power supply have +/-10% tolerances with respect to the indicated value. tq +25°C (CIE 121).

We reserve the right to make technical changes.

Targetti Sankey S.r.l.
Via Pratese, 164
50145 Firenze - Italy
Tel: +39 055 37911
targetti.com
targetti@targetti.com

CCIAA Firenze
Share Capital:
€ 500.000,00
VAT N. (IT):
01537660480
R.E.A: FI-275656

TARGETTI

T042FM830ELPW | CCTLED DOWNLIGHT Feel
Recessed LED downlight

Accessories

Emergency Kit

	Code
	A059

Emergency kit composed of an inverter a LIFePO4 battery and a LED Green indicator.
Allows permanent EP emergency use of the fixture it is connected to.
The 1h or 3h autonomy can be selected by configuring the fixture.
The batteries take 12h to completely recharge.
LED Green indicator wired to the inverter through single-core cables L= 800mm.
Emergency kit for fixtures that comply with EN 60598-2-22 standard, high risk areas excluded.
Battery size 160x54x30 mm.
Inverter size 165x40x25 mm.

Due to the technological evolution of the electronic components, the data provided may be updated, and as such, confirmation must be requested during the order process.
Luminous flux and power supply have +/-10% tolerances with respect to the indicated value. tq +25°C (CIE 121).

We reserve the right to make technical changes.

Targetti Sankey S.r.l.
Via Pratese, 164
50145 Firenze - Italy
Tel: +39 055 37911
targetti.com
targetti@targetti.com

CCIAA Firenze
Share Capital:
€ 500.000,00
VAT N. (IT):
01537660480
R.E.A: FI-275656

TARGETTI